BÄRO
Retail
Lighting

Ontero XR

Article number: 20560008

LIGHT TECHNOLOGY

LED	COB
Light colour	830
Luminous flux	1890 lm
System power	17 W
Luminaire Efficiency	111 lm/W
Reflector	OvalBasic
Beam angle	60° x 40°
Controller	On/Off

LUMINAIRE

Rotation angle	330°
Swivel angle	+/- 85°
Weight	0.54 kg
Protection rating . class	IP 20 . II
Luminaire colour	silver

OPTIONEEL

RAL-colours, NCS-colours (powder coating or wet spraying) on inquiry, surface alloys on inquiry, honeycomb louver

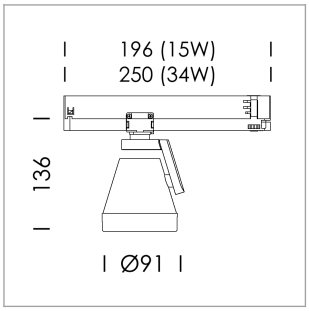

Surface-mounted luminaire mit LED, rated life of the LED L80/B10 50000 h (tambient 25°C), colour rendering index CRI > 80, chromaticity tolerance 2 SDCM (initial), reflector with oval light distribution pattern,reflector pure aluminium 99,99% in MIRO-Silver®, luminaire head/retention arm die-cast aluminium, powder-coated, silver, rotation angle 330°, swivel angle +/- 85°, In-Track-Adapter, On/Off, 220-240 V~ / 50-60 Hz, max. 27 luminaires per circuit (B16A fuse)

In-Track-Adapter 220-240 V~ / 50-60 Hz
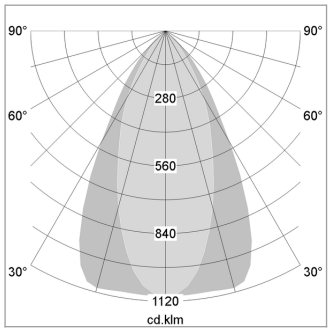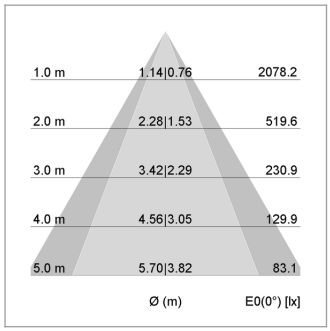
Note: All data are typical values. System features may change with product improvements due to technical advances. Errors excepted.